

Working and Learning with K'NEX

A Practical Handbook for Teaching, Developing, and Assessing Knowledge and Skills

John Quakernaat

K'NEXCHANGE

Working and Learning with K’NEX

John Quakernaat

Working and Learning with K’NEX

A Practical Handbook for Teaching, Developing, and Assessing Knowledge and Skills

K’NEXCHANGE

Working and Learning with K’NEX

A Practical Handbook for Teaching, Developing, and Assessing Knowledge and Skills

Author and editor: John Quakernaat

Published by: K’NEXCHANGE

Version: 1.0 — final US English publication edition

Publication date: October 2026

© 2026 John Quakernaat. All rights reserved.

Prior permission is required to reproduce, adapt, translate, or distribute substantial portions, unless otherwise stated for the material concerned.

Editor: John Quakernaat

Design: K’NEXCHANGE

Illustrations: included where appropriate in the publication design

Website: knexchange.org | Email: info@knexchange.org

Foreword

K’NEX invites action. A student or participant picks up a part, tries a connection, compares possibilities, and immediately sees what a choice does in a construction. It is precisely this combination of thinking and doing that makes the material useful in a wide range of learning situations. But building is not the same as learning. What someone learns depends on the goal, the activity, the instruction and guidance, the participant, and the context.

This handbook is therefore neither a collection of building assignments nor a prescribed teaching method. It is a practical starting point for teachers and facilitators who want to use K’NEX purposefully to teach, develop, evaluate, and, where appropriate, assess knowledge and skills. The professional remains responsible for deciding what fits their students or participants, curriculum, available time, and educational or facilitation setting.

The structure follows that professional process. First, the learner’s starting point is considered, followed by the goal. A suitable K’NEX activity is then selected or designed, prepared, and facilitated. Evaluation shows what the activity has produced and what next step is appropriate. Where needed, focused observation or assessment can be added. This creates a route that can be repeated, broadened, and deepened.

The main text is deliberately practical. The pedagogical and instructional background needed to understand the choices in this handbook is brought together concisely in Appendix A. This allows the handbook to be used independently without requiring a second publication.

Contents

Foreword ii
Introduction — K'NEX as a Learning Tool 1
Purpose of This Handbook 1
Who Is This Handbook For? 1
K'NEX as a Means, Not an End 1
The Professional Route 2
Part A — Determining What You Want to Achieve 4

1 Start with the Student or Participant 5
The Starting Point 5
What Do You Want to Know in Advance? 5
2 Determine the Learning or Developmental Goal 6
Start with the Goal, Not the Building Activity 6
Make the Goal Concrete 6
Think About Success Criteria in Advance 6
3 Seven Areas of Learning and Development 8
3.1 Motor and Sensory Development 8
3.2 Spatial and Mathematical Thinking 8
3.3 Investigation, Reasoning, and Concept Development 8
3.4 Creativity and Problem Solving 8
3.5 Language and Communication 9
3.6 Social Development and Group Formation 9
3.7 Self-Regulation and Learning to Learn 9
Connections Without Trying to Do Everything at Once 9
Part B — From Goal to Activity 10

4 Choose or Design a Suitable K'NEX Activity 11
Let the Activity Serve the Goal 11
Subject and Project Connections 11
Check the Activity 11
5 Sketching, Designing, and Working Systematically 13
Sketching as a Tool for Thinking and Communication 13
Designing: Choosing, Testing, and Improving 13
Working Systematically 13
6 Prepare the Learning Environment and Organization 14
Materials 14
Space, Time, and Wrap-Up 14
Preparation Check 14
7 Collaborating and Using Roles 15

Roles as a Tool 15
Part C — Instruction, Guidance, and Deeper Learning 16

8 Instruction and Guidance 17
Modeling and Making Thinking Visible 17
Questions That Move the Work Forward 17
Using Errors and Unsuccessful Attempts 17
Reducing Support 17
9 Differentiation 19
10 Spiral Learning and Deepening 20
Part D — Evaluation and Assessment 21

11 Gaining Insight into What Was Learned 22
Simple Evaluation Questions 22
12 Focused Observation When Needed 23
Two Different Outcomes 23
13 Assessing Knowledge and Skills 24
14 Observation Points and Assessment Tools 25
Optional Scale 25
15 Determine the Next Step 26
From Evaluation to the Next Step 26
Part E — From Principles to Practice 27

16 Practical Examples 28
Example 1 — Comparing and Improving a Bridge 28
Example 2 — Building Instructions Without Seeing the Model 28
Example 3 — Designing Within Requirements 29
17 A Complete Route 30
Starting Point and Prior Knowledge 30
Goal and Success Criteria 30
Activity and Preparation 30
Instruction and Guidance 17
Evaluation, Observation, and Feedback 30
Next Step 26
Part F — Tools 32

18 Selection Guide for Areas of Learning and Development 33
19 Selection Guide for Observation Points 34
Motor and Sensory Development 8
Spatial and Mathematical Thinking 8
Investigation, Reasoning, and Concept Development 8
Creativity and Problem Solving 8

Language and Communication....9
Social Development and Group Formation....9
Self-Regulation and Learning to Learn....9
20 Role Bank....36
21 Forms and Worksheets....37
21.1 Preparing an Activity....37
21.2 Connecting Goal, Activity, and Success Criteria....38
21.3 Focused Observation....39
21.4 Evaluation and Reflection....40
21.5 Progress Across Multiple Activities....41
Appendix A — Pedagogical and Instructional Background 42
A.1 K'NEX as a Tool for Learning and Development....42
A.2 The Student as the Starting Point....42
A.3 Pedagogical and Instructional Principles....42
A.4 The Seven Areas of Learning and Development....43
A.5 Learning Through Building, Acting, Investigating, and Designing....43
A.6 Instruction and Guidance....43
A.7 Differentiation and Spiral Learning....43
A.8 Evaluation, Assessment, and Further Learning....44
A.9 Careful and Responsible Use....44
Glossary....45
Sources and Content Rationale....46
About K'NEXCHANGE....47

Introduction — K’NEX as a Learning Tool

Purpose of This Handbook

This handbook helps teachers and professional facilitators use K’NEX purposefully as a learning tool. The central question is: how can I use K’NEX to teach and develop knowledge and skills and, where appropriate, evaluate or assess them? The answer does not begin with a model that can be built, but with what the student or participant needs to learn, practice, investigate, or demonstrate.

The teacher or facilitator is the professional. This handbook therefore does not cover general teaching principles that could be described in the same way in every educational context. It focuses on choices that become specific when K’NEX is the material or medium: which activity provides the right learning opportunity, which parts and forms of construction fit that purpose, which support is functional, and what can actually become visible while building, investigating, or designing?

Who Is This Handbook For?

The examples and tools can be used in elementary and secondary education, vocational and special education, postsecondary career and technical education, extracurricular STEM and maker activities, and other facilitated learning settings. The term student is used where an educational context is primary; participant is used where the context is broader. The term builder is used only when it refers to a specific role.

K’NEX as a Means, Not an End

A successful construction is not automatic evidence that the intended learning has taken place. A model may be sturdy and correct while a participant cannot explain the construction principles used. Conversely, an unsuccessful construction can provide valuable information when someone deliberately investigates why something does not work, revises a prediction, and develops a better solution.

Activity and outcome are therefore always connected to the goal selected in advance. Sometimes building itself is mainly a way to make a concept visible. Sometimes the material serves as an experimental setup, a design medium, a context for language or collaboration, or a concrete setting for mathematics

and measurement. The same K’NEX activity may offer several possibilities, but not all of them need to be goals at the same time.

The Professional Route

The handbook follows a consistent main route. It is not a rigid procedure, but a framework professionals can use to check and justify their choices.

- student or participant and relevant prior knowledge
- learning or developmental goal
- suitable K’NEX activity
- preparation of materials, environment, and organization
- instruction and guidance
- evaluation of process and outcomes
- focused observation and/or assessment where appropriate
- feedback and next step
- repeat, broaden, or deepen

The parts of this handbook follow this route. Part A helps determine what you want to achieve. Part B translates that goal into an activity and its organization. Part C focuses on instruction, guidance, and deeper learning. Part D covers evaluation, observation, and assessment. Part E shows the route through practical examples. Part F contains tools that can be used directly or adapted. For the pedagogical and instructional background to these choices, see Appendix A.

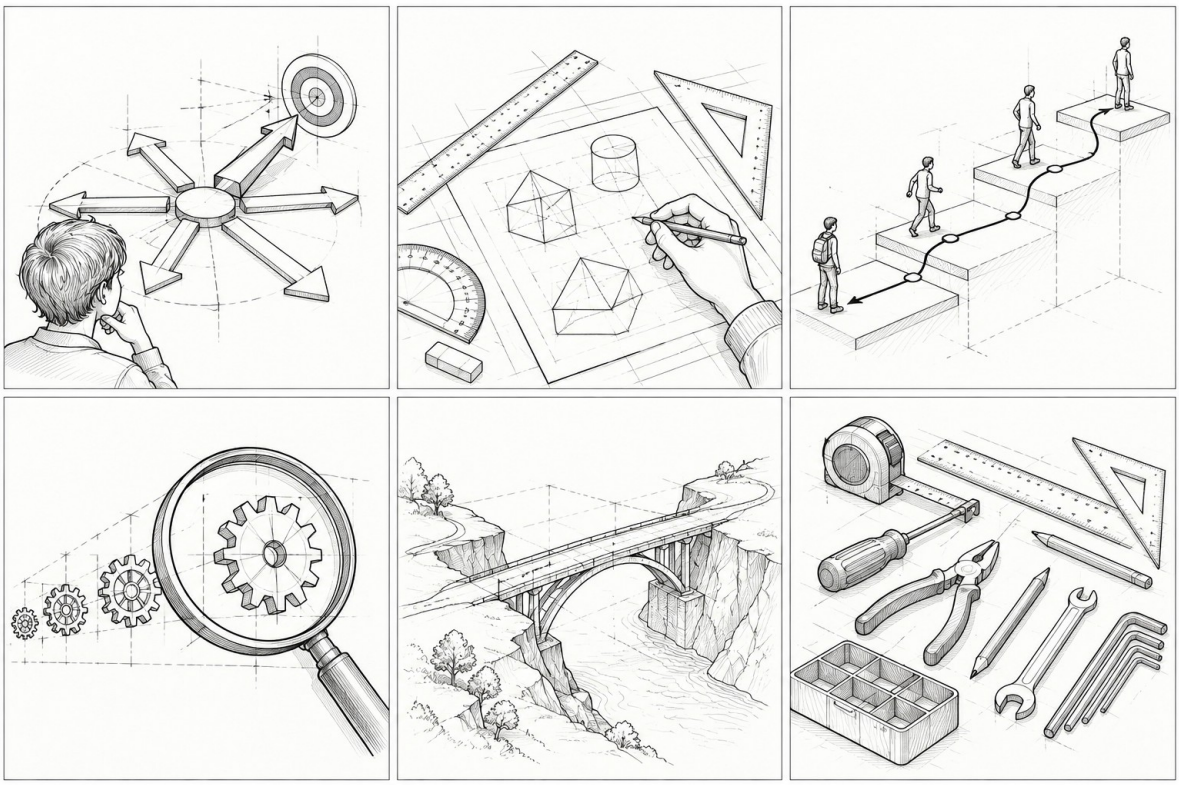

Part A — Determining What You Want to Achieve

A K’NEX activity becomes purposeful when it is clear in advance who the activity is for and what it is intended to achieve. This part therefore begins with the student or participant, not the material. The goal is then refined and linked to one of seven areas of learning and development.

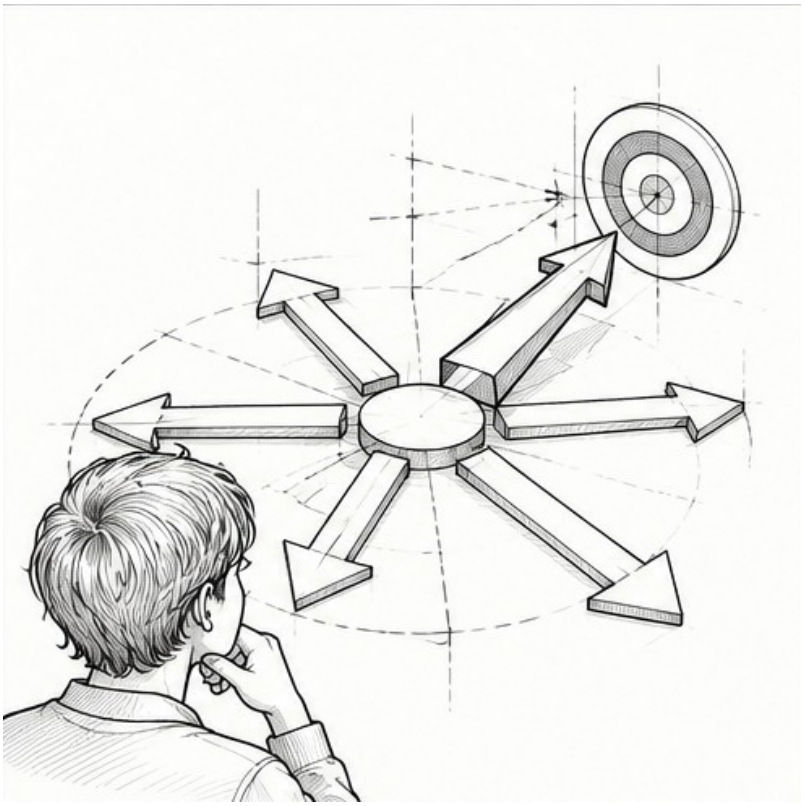

1 Start with the Student or Participant

The Starting Point

A useful starting point contains only information relevant to the planned activity. Consider prior knowledge, practical skills, experience with construction materials, language needed to understand the task, motivation, support needs, and how someone works independently or with others. The aim is not to create a complete student profile, but to gather information that helps select an appropriate goal, activity, and level of support.

Experience with K’NEX deserves separate attention. A student may understand the subject matter well but still need time to recognize parts, make connections, or read building instructions. An experienced builder may construct quickly without demonstrating the intended subject-specific understanding. Skill with the material and the learning goal should therefore not be confused.

What Do You Want to Know in Advance?

- ☐ Which prior knowledge and skills are relevant to this activity?
- ☐ What experience does the student or participant have with K’NEX or similar construction materials?
- ☐ Which concepts, instructional language, or subject-specific vocabulary are needed?
- ☐ Which interests or motivations can support the activity?
- ☐ What support, adaptation, or additional challenge may be needed?
- ☐ Will the work be individual, or is collaboration part of the learning opportunity?

With this starting point in view, the goal can be determined. The question then shifts from “What can we build?” to “What do I want this student or participant to learn, practice, or demonstrate through this activity?”

2 Determine the Learning or Developmental Goal

Start with the Goal, Not the Building Activity

An appealing K’NEX assignment can be a good source of inspiration, but it is not yet a learning goal. “Build a bridge” describes an activity. The goal might be to compare structures, apply ratios, explain forces, systematically improve a design, or give and follow technical instructions. Only when the goal is clear can you determine whether a bridge-building assignment provides the right learning opportunity.

Make the Goal Concrete

A useful goal makes clear what the student should know, understand, be able to do, or demonstrate during or after the activity. It does not have to be made artificially measurable, but it should be concrete enough to align the activity, guidance, and evaluation.

- Knowledge: for example, recognizing, naming, explaining, or applying concepts.
- Skills: for example, measuring, constructing, investigating, designing, communicating, or collaborating.
- Development: for example, planning more independently, checking more deliberately, or responding more effectively to an unsuccessful attempt.

An activity may have secondary goals or unexpected learning outcomes. Keep one main goal, or a small number of closely related main goals, clearly identifiable. This prevents every visible behavior from being labeled an outcome after the fact.

Think About Success Criteria in Advance

Success criteria describe how you can tell that the student is moving toward the goal or has reached it. With K’NEX, these criteria may relate to actions, explanations, choices, measurements, comparisons, adaptations, or the final model. An attractive model is an appropriate criterion only when the quality of that model is actually part of the goal.

- ☐ What do I want the student to learn, be able to do, or demonstrate?
- ☐ Which activity genuinely provides an opportunity to do that?
- ☐ How can I tell during or after the activity that the student is moving toward the goal?
- ☐ What information do I need to determine a next step?

The seven areas in the next chapter help place a broadly stated goal more precisely. They are neither subject categories nor a checklist that every activity must cover in full.

3 Seven Areas of Learning and Development

K’NEX can play a functional role in different areas of learning and development. The seven areas below provide a framework for choosing goals, activities, and observations. In practice, they overlap. A design task may call on spatial thinking, problem solving, and communication at the same time. Choose what is central to the activity and treat the rest only when relevant.

3.1 Motor and Sensory Development

Handling, positioning, connecting, and removing parts requires coordination between seeing and doing, controlled use of force, and purposeful fine-motor movements. This area may be central when material handling or hand-eye coordination is intentionally practiced, but in many other activities it is mainly a prerequisite. Choose parts and connections that fit the participant and the goal; unnecessarily difficult connections can overshadow the content of the task.

3.2 Spatial and Mathematical Thinking

Constructions make length, direction, angle, symmetry, shape, proportion, distance, and number concrete. Students can translate an image into a three-dimensional construction, compare measurements, recognize patterns, predict the effect of a change, and check whether a model meets spatial or mathematical conditions. The material serves as a means to make relationships visible and discussable.

3.3 Investigation, Reasoning, and Concept Development

A K’NEX model can serve as an object of investigation or a simple experimental setup. A student can formulate a question, make a prediction, change one feature, compare outcomes, and revise an explanation. Concepts gain meaning when they are connected to observations and actions. Keep the amount of building proportionate to the investigation question.

3.4 Creativity and Problem Solving

Open or semi-open building tasks provide room to explore alternatives, make choices, test, and improve. Creativity does not mean that every solution must be completely unrestricted. Requirements and constraints can give useful

direction to design. A problem becomes a learning opportunity when the student can investigate its cause and purposefully adjust an approach.

3.5 Language and Communication

Building provides a concrete context for describing, asking questions, giving instructions, using subject-specific vocabulary, and explaining choices. The language component becomes stronger when communication is necessary to complete the task—for example, when one student describes a model another cannot see, or when a group must justify design choices. Language then becomes part of the task rather than simply conversation alongside building.

3.6 Social Development and Group Formation

Building together can provide opportunities to coordinate tasks, ask for and offer help, take and give space, and solve problems jointly. This does not happen automatically because students sit at the same table. When collaboration is a goal, the activity must require genuine coordination or interdependence. Roles can help, but only when they are functional; see Chapter 7 and the role bank in Chapter 20.

3.7 Self-Regulation and Learning to Learn

K’NEX activities can make visible how a student directs attention, follows a plan, resumes after a setback, checks their own work, and changes an approach. Multi-step tasks that involve testing and improvement are particularly suitable for this. The professional decides whether this is a central goal or simply background information for guidance.

Connections Without Trying to Do Everything at Once

The seven areas are intended to support choices. An activity is usually stronger when it is clear which area, or which combination of areas, is central. The chosen goal then determines which activity is suitable. This is where Part B begins.Deel B

Part B — From Goal to Activity

Once the goal and starting point are clear, the K’NEX activity can be selected or designed. The question is not which assignment is most spectacular, but which actions and thinking steps create the right learning opportunity.

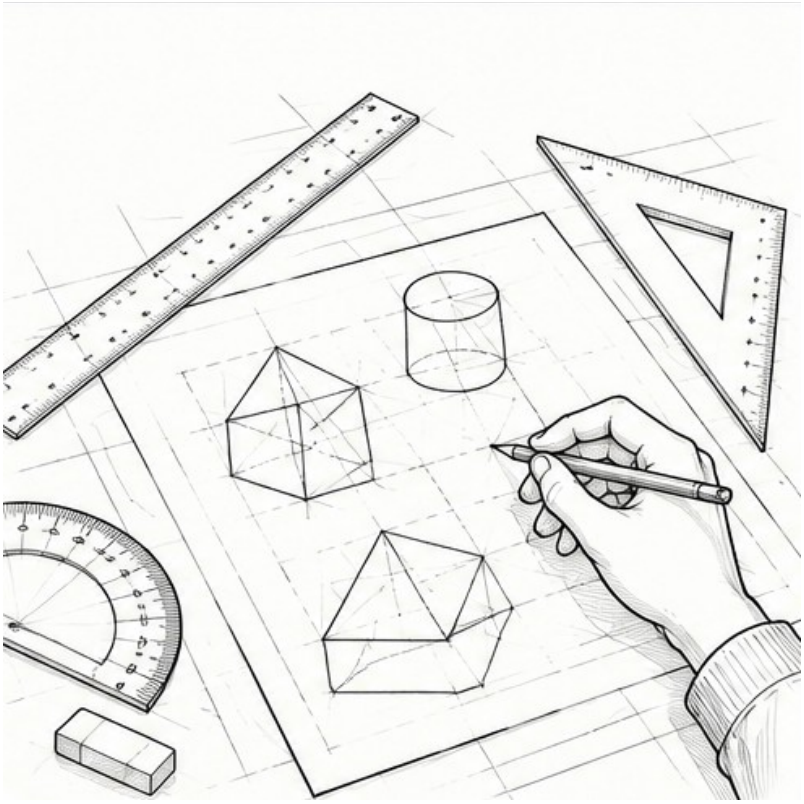

4 Choose or Design a Suitable K’NEX Activity

Let the Activity Serve the Goal

A suitable activity places the student in a situation in which the intended learning becomes necessary or meaningful. Someone learning to compare ratios needs a task in which measuring or comparing has a function. Someone learning to explain a structural principle needs to do more than copy a model: they need to predict, test, or explain. Someone learning to design needs room to make choices and improve.

Choose the degree of openness deliberately. Copying a model can be suitable for learning material skills, sequence, or a technical principle. A semi-open task can leave one or more design choices to the student. An open design challenge offers more freedom, but also requires more prior knowledge, planning, and guidance. More freedom does not automatically mean more learning.

Subject and Project Connections

K’NEX can be used across subjects and projects, for example in mathematics, science and technology, language, art and design, or interdisciplinary STEM activities. The connection is functional when building, investigating, or designing is genuinely needed to work toward the chosen goal. Do not add subject content simply because it can be associated with a model; let the goal and learning activity remain the guide.

Check the Activity

- ☐ Is the learning goal genuinely addressed in this activity?
- ☐ Does the technical difficulty of the building fit the student and the goal?
- ☐ Is it clear which elements are fixed and where choices are possible?
- ☐ Are the required parts, time, and workspace realistic?
- ☐ Does the activity provide sufficient opportunity to evaluate or observe the goal?
- ☐ Can the task be simplified without losing the core of the goal?

Once the activity fits, the next question is how the student will work through it. Sketching, designing, and working systematically are not mandatory steps, but useful approaches when they support the goal.

5 Sketching, Designing, and Working Systematically

Sketching as a Tool for Thinking and Communication

A sketch can help organize an idea before materials are used. It does not need to be a technical drawing. A simple shape sketch, measurement note, or indication of moving parts may be enough to make choices visible. Use sketches especially when thinking ahead, communicating, or comparing later is part of the learning process.

Designing: Choosing, Testing, and Improving

In design work, the first model is rarely the endpoint. Frame a task with a clear goal and appropriate requirements. Have students develop a solution, build it, test it, and adjust it based on their findings. The quality of the learning then lies not only in the final model, but also in the reasoning behind choices and improvements.

Working Systematically

For larger tasks, simple planning can prevent all attention from going into building. Students might first identify functions or subproblems, reserve materials, determine a sequence, and agree on intermediate checkpoints. How much planning is needed depends on the goal and the group’s level of independence.

- Getting to know the material: look → compare → name → try → check.
- Investigating: ask → predict → try/test → observe carefully → compare → explain.
- Designing: task → think → choose → build → test → improve → explain.

These sequences are tools. Use them only when they clarify the activity. Chapter 6 translates the activity into the concrete learning environment and organization.

6 Prepare the Learning Environment and Organization

A good activity can stall when materials, space, or time are not aligned with the task. With K’NEX, preparation is also instructionally relevant: how parts are presented can influence how much students need to search, choose, count, compare, or plan.

Materials

Decide in advance which parts are needed and how much choice is desirable. A fully presorted set can keep attention on a content goal; a broader material selection can itself be part of designing or planning. Keep spare parts available when missing pieces would unnecessarily block the learning process.

Space, Time, and Wrap-Up

Provide enough workspace and make clear in advance what will happen to unfinished work. Building time is not the same as learning time: also allow time for explanation, testing, comparison, discussion, and cleanup. For activities that span several days, it helps to store models or subassemblies in an identifiable way and briefly record key choices.

Preparation Check

- ☐ Are the goal, activity, and success criteria clear?
- ☐ Are the required K’NEX parts and any additional materials available?
- ☐ Does the workspace support individual or collaborative building and testing?
- ☐ Is there time for instruction, implementation, evaluation, and cleanup?
- ☐ Is it clear how models, materials, and student work will be stored or completed?
- ☐ Have any relevant safety and manufacturer instructions been considered?

When students work together, there is an additional design choice: what form of collaboration best supports the activity and the goal?

7 Collaborating and Using Roles

Collaboration is meaningful when students genuinely need one another or when coordination itself is part of the goal. Several students working on one model does not automatically create collaboration; it can also mean that one student builds while others watch. Make clear what must be done jointly and what individual contribution is needed.

Roles as a Tool

Roles can provide structure, especially when tasks might otherwise be distributed unevenly. Do not use them as a fixed routine. A role is functional when it contributes to the learning goal, the organization, or a relevant observation opportunity. Possible roles include builder, materials manager, designer, explainer, investigator, checker, and planner. Chapter 20 contains a role bank.

Roles can change during a longer activity, but changing roles is not a goal in itself. In a short investigation, it may be clearer for one student to measure and another to build, provided both are involved in interpreting the results. The chosen organization should support learning, not overshadow it.

With the activity and organization prepared, attention shifts to what happens during the work: instructing, asking questions, providing space, and gradually adjusting support.

Part C — Instruction, Guidance, and Deeper Learning

The activity has been selected and prepared. During implementation, attention shifts to how students or participants can work toward the goal. Instruction and guidance are aligned with what the activity requires and with what the student or participant can already do.

This part focuses on instruction and guidance while working with K’NEX, differentiation where needed, and further development of knowledge and skills by revisiting them in new situations. Support is matched to what is needed and, where possible, gradually reduced to create room for increasing independence.

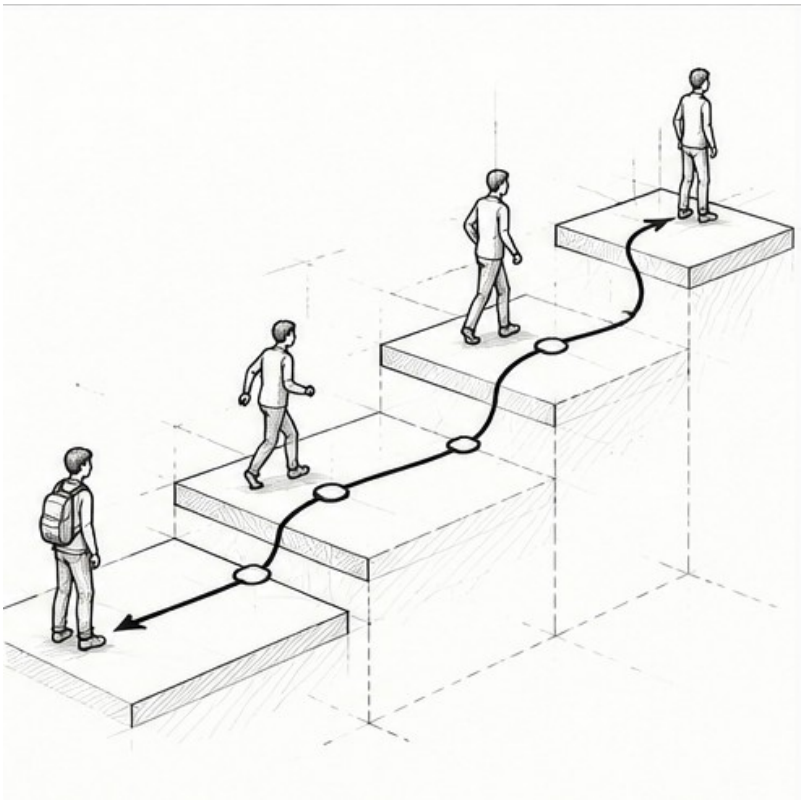

8 Instruction and Guidance

K’NEX makes many actions immediately visible. This creates opportunities for brief, focused instruction followed by immediate application. Provide just enough explanation to give the student access to the relevant learning. If the goal is investigative reasoning, for example, a complete building demonstration may remove the choices that are needed for learning. If the goal is a technical principle, demonstrating a procedure can free time for the content.

Modeling and Making Thinking Visible

For an unfamiliar connection or procedure, modeling can be efficient. Describe not only what you are doing, but, where appropriate, what you are paying attention to: “I first check whether both rods are the same length” or “I change only one part so I can compare the outcome.” This connects the thinking step to the action.

Questions That Move the Work Forward

Questions are most useful when they bring the student back to the goal, observation, or choice. For example: What do you see changing? What is that based on? Which two solutions can you compare? What would you test first? Which change fits the requirement? A question that already gives away the solution reduces the learning opportunity.

Using Errors and Unsuccessful Attempts

An unstable model, jammed mechanism, or incorrect measurement can become a meaningful moment. First have the student determine what is happening and why it matters. Then add support as needed: a focused question, a hint, an example connection, or temporarily working together. The goal is not to leave every error unresolved, but to provide enough support for the student to move forward.

Reducing Support

When a student masters an action or thinking step, support can be reduced. This might mean fewer example steps, less detailed building instructions, more choice of materials, an additional requirement, or asking the student to explain

the chosen approach to someone else. This creates a natural transition to differentiation.

9 Differentiation

Differentiation with K’NEX does not have to mean giving every student a different assignment. Often the same goal can be maintained while access, support, or complexity varies. The professional chooses which adjustment is needed based on the starting point and observed progress.

- Materials: less or more choice, a larger or smaller selection, presorting parts or having students select them.
- Instruction: modeling, providing intermediate steps, using visual support, or deliberately reducing instruction.
- Task: limiting or expanding requirements, adding one variable, or providing more design freedom.
- Process: adding checkpoints, collaborating, using a plan, or asking for greater independence.
- Demonstration of learning: explaining orally, sketching, measuring, comparing, or recording in writing.

An adjustment is appropriate when it gives the student access to the same core learning or to a deliberately chosen next step. Do not make a task simply larger or more complicated in order to create challenge. Deeper learning comes primarily from more precise reasoning, more independent choices, or applying knowledge in a new situation.

10 Spiral Learning and Deepening

Much knowledge and many skills are not acquired in a single K’NEX activity. Spiral learning means that a concept or skill returns in new situations with greater depth, independence, or connection. Repetition then serves a new purpose.

A student might first recognize that triangles can strengthen a structure, then compare different ways of reinforcing it, next explain why a solution works, and finally apply that principle independently in a new design. The visible construction changes, but more importantly, the thinking develops.

- recognize and name
- try purposefully and compare
- investigate and explain
- apply in a new situation
- design, improve, and justify

This sequence is not a required proficiency scale. It helps design next steps that go beyond “now build a larger model.” Part D shows how evaluation provides information for choosing such a next step.Deel D

Part D — Evaluation and Assessment

Evaluation is part of the professional cycle and comes first. Focused observation or assessment is added only when it contributes something useful for the goal or context. The material makes many actions visible, but not every visible behavior needs to be recorded or scored.

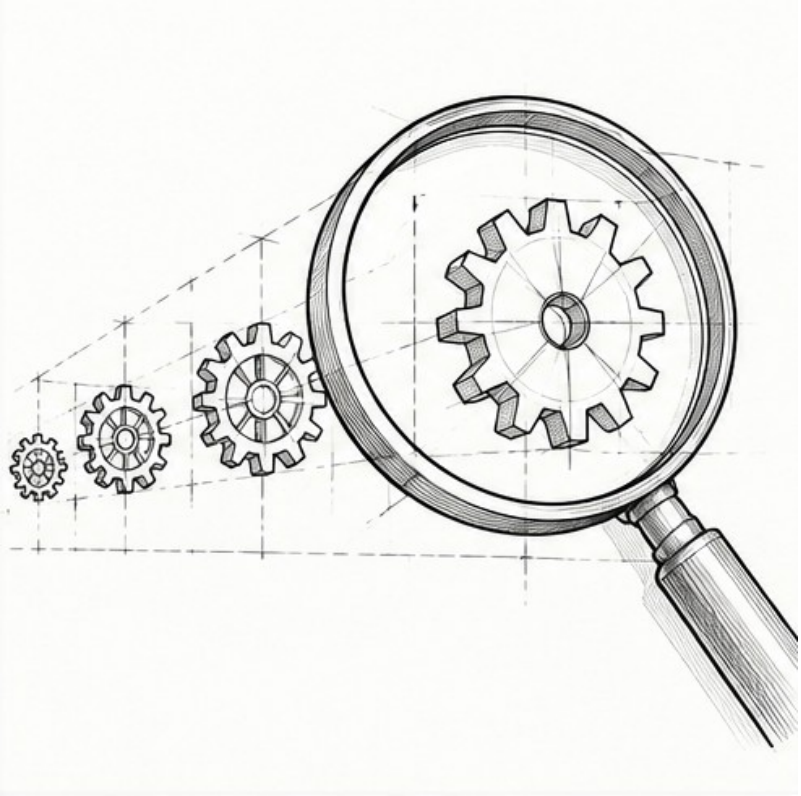

11 Gaining Insight into What Was Learned

During and after the activity, use the information that naturally becomes available: what students do, say, build, measure, draw, test, and change. A brief conversation can sometimes reveal more than a form. Ask, for example, which choice mattered most, what a test showed, or what someone would do differently on a next attempt.

Connect evaluation to the success criteria established in advance. When the goal is explanation, a correct model alone is not enough. When the goal is accurate construction, the model itself may provide important information. Combine product, process, and explanation where needed.

Simple Evaluation Questions

- What was successful in relation to the goal?
- What evidence, observation, or outcome supports that conclusion?
- Where did the student get stuck, and why?
- What support was needed?
- What is a logical next step?

If this ordinary professional evaluation provides enough information, a separate observation tool is not needed. When a more precise look at particular behavior or development is useful, focused observation can be used.

12 Focused Observation When Needed

Focused observation means deciding in advance what to look for and why. Choose only points that fit the goal and the activity. A long list of possible behaviors can easily distract from facilitation and increase the risk that behavior seen by chance is given too much weight.

Observation is context-dependent. What is not visible in one activity says little about what a student can do in another situation. When useful, record the circumstances, the support provided, and whether there was actually an opportunity for the behavior to be demonstrated.

Two Different Outcomes

- NO — not observed: there was an appropriate opportunity and the criterion was monitored, but the behavior was not seen.
- NOO — no appropriate opportunity to observe: the activity or situation did not provide a realistic opportunity to demonstrate the criterion.

This distinction prevents “not seen” from automatically being interpreted as “cannot do it.” Observation in this handbook is not diagnostic and does not replace existing professional or organizational tools.

13 Assessing Knowledge and Skills

Assessment is appropriate only when the educational or facilitation context calls for it. The assessment should align with the goal selected in advance, the activity, the support provided, and the circumstances. Do not assess more than the activity can reasonably make visible.

In a design activity, for example, assessment might consider whether functional requirements are met, how testing and improvement are carried out, and how choices are justified. In an investigation, the question, prediction, observation, comparison, and explanation may be central. With a language goal, the construction may mainly provide a context for an oral or written explanation.

A score is not necessary. Qualitative feedback can describe more precisely what the student already masters and what the next step is. When a scale is functional, use it to describe development within the activity, not to rank participants against one another.

14 Observation Points and Assessment Tools

Chapter 19 contains a bank of 35 observation points, five for each area of learning and development. The bank is a selection tool. Choose in advance only the points directly related to the goal. Adapt wording to age, activity, and context where necessary without changing the meaning.

Optional Scale

- 1 — barely visible / extensive support
- 2 — sometimes visible / extensive support
- 3 — regularly visible / some support
- 4 — often visible / largely independent
- 5 — clearly and independently visible, appropriate to the stated goal and this activity
- NO — not observed
- NOO — no appropriate opportunity to observe

Use a scale only when the additional structure is genuinely helpful. A brief description of what the student did, what support was needed, and what a possible next step might be is often at least as informative.

15 Determine the Next Step

Evaluation becomes meaningful when it leads to a next step. That step might involve repeating with less support, applying the same concept in a different construction, adding a requirement, deepening an explanation, changing a role, or formulating a new investigation question.

From Evaluation to the Next Step

- ☐ What does the student already master well enough not to practice again in the same way?
- ☐ Which thinking step, skill, or concept still needs support?
- ☐ Should the next activity repeat, broaden, or deepen the learning?
- ☐ Can support be reduced, or should it temporarily be increased?
- ☐ Which new context can show whether the learning can also be applied elsewhere?

This completes the main route. Part E shows how the individual choices come together in complete practical situations.Deel E

Part E — From Principles to Practice

In this part, the individual choices from the preceding parts come together. The practical examples show how starting point, goal, activity, guidance, and evaluation influence one another. One complete route is then worked through step by step, from the initial estimate of prior knowledge to feedback and an appropriate next step. The examples are not fixed lesson recipes; they show how the same line of reasoning can be applied in different situations.

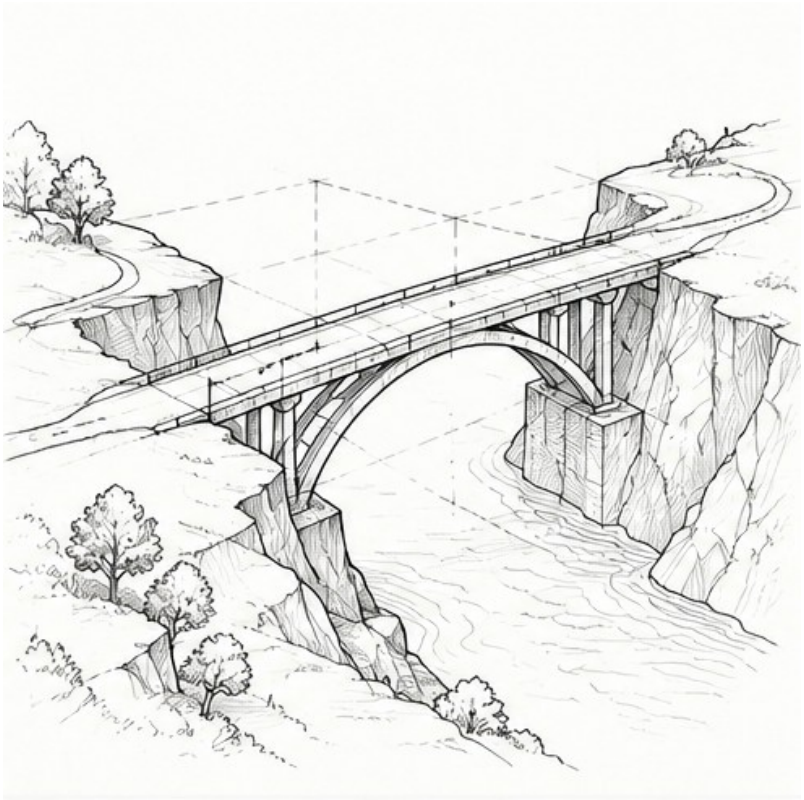

16 Practical Examples

Example 1 — Comparing and Improving a Bridge

Situation: secondary-school students have experience with simple K’NEX connections and can measure, but have little experience systematically comparing structures. The goal is not to “build a bridge,” but to investigate how structural choices affect strength and deformation and to use findings to improve a design.

The teacher first has groups build a simple span within the same approximate dimensions. Each group then chooses one change, such as a different form of reinforcement. The groups predict what the change will do, test it in an agreed way, and compare the outcome with the first model. The discussion focuses on the relationship between the change, the observation, and the explanation.

- Central area: investigation, reasoning, and concept development; spatial thinking as a supporting area.
- Success criteria: the student purposefully changes one relevant feature, compares outcomes, and uses the observation in an explanation or improvement.
- Next step: apply the same principle in a tower or another model with fewer prompts.

Example 2 — Building Instructions Without Seeing the Model

Situation: two students have the same small selection of parts. One student builds a simple construction behind a screen and gives verbal instructions; the other tries to reproduce the model without seeing the original. The goal is to give understandable instructions and ask focused questions for clarification.

The building task remains technically simple so that the language task stays central. At the end, the two models are compared. The students discuss which words, sequence, and checking questions helped, then complete a second round using revised agreements.

- Central area: language and communication.

- Success criteria: name relevant features, give instructions in a usable sequence, ask for clarification, and adjust communication when the result differs.
- Next step: add more technical vocabulary or a more complex spatial relationship.

Example 3 — Designing Within Requirements

Situation: participants are asked to design a vehicle or moving model that meets a limited number of functional requirements. The goal is systematic design and improvement, not reproducing a single example.

Requirements and available materials are established in advance. Participants make a brief sketch or plan, build a first version, test it against the same criteria, and choose one targeted improvement. At the end, they explain which change had the greatest effect.

- Central area: creativity and problem solving; self-regulation and learning to learn may be selected as a secondary goal.
- Success criteria: choose a solution that fits the requirements, test it, make a relevant adjustment, and explain that choice.
- Next step: add an additional constraint or compare the solution with another group.

17 A Complete Route

The example below shows the full route. It is not a lesson recipe, but a model of how the choices connect.

Starting Point and Prior Knowledge

A group of students can build simple K’NEX structures and compare lengths. In earlier tasks, they tended to improve models mainly by intuition; predictions and test results were used only minimally. The teacher wants to strengthen reasoning from observations.

Goal and Success Criteria

Goal: students use a simple test to compare two structural variants and justify an improvement using the observed outcome. Success criteria: formulate an expectation in advance, identify one relevant change, test in the same way, compare outcomes, and connect the improvement to that comparison.

Activity and Preparation

The teacher selects a small bridge structure that can be built in two variants within the available time. The required parts are prepared for each group; additional reinforcement parts are available separately. The test method is kept the same in advance so comparison is possible.

Instruction and Guidance

The teacher demonstrates only the test method and discusses why the same test is necessary. Groups decide for themselves which change they want to investigate. During the activity, the teacher mainly asks questions about prediction, observation, and comparison. Technical help is provided when a building problem blocks the investigation question.

Evaluation, Observation, and Feedback

Evaluation consists of comparing the two variants and giving a brief oral explanation. Focused observation is needed only if the teacher also wants to record development in investigative reasoning. Points such as “makes a prediction,” “compares outcomes,” and “uses observations to reason” can then

be selected. Feedback identifies what is already convincing in the reasoning and which step could be made more explicit.

Next Step

In a subsequent activity, students receive a different construction and choose more independently how to carry out a comparison. The same model is not repeated; instead, the investigative principle is applied in a new context. This is spiral deepening.

Part F — Tools

The tools in this part are intended for selective use. Choose only what adds value for the goal, the activity, and your own professional practice. A brief conversation, a focused note, or an existing tool used by the school or organization may be sufficient. The forms are aids, not required administration and not replacements for existing professional systems.

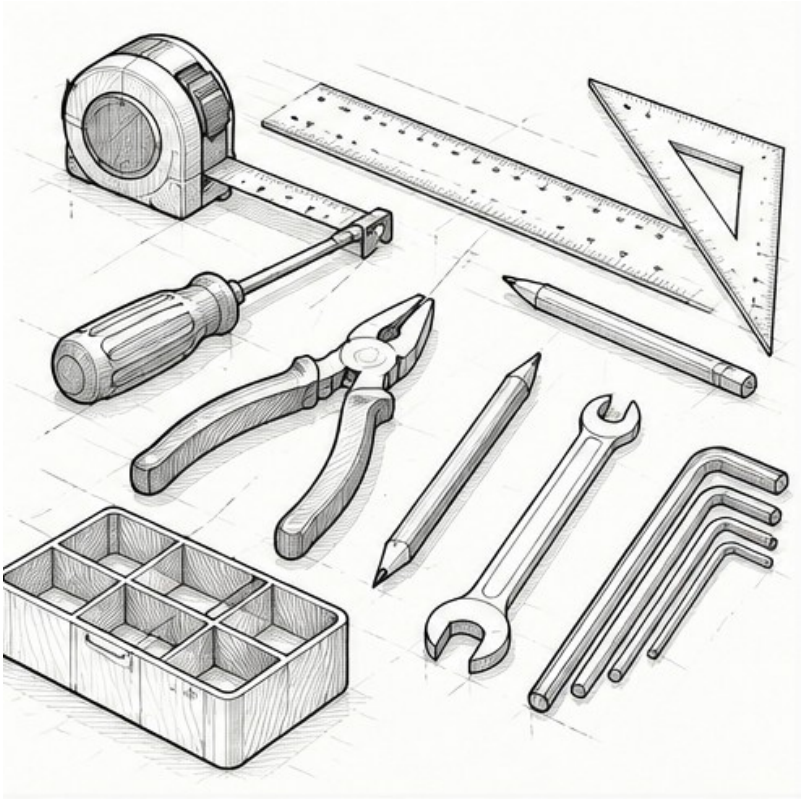

18 Selection Guide for Areas of Learning and Development

Use this guide when a building idea seems appealing but the goal is not yet precise, or when you want to check which area is genuinely central.

☐ Motor and sensory development — is the goal about purposeful handling, controlling force, coordinating seeing and doing, or distinguishing relevant material features?
☐ Spatial and mathematical thinking — is it about space, shape, measurement, proportion, number, pattern, symmetry, direction, or translating between an image and a construction?
☐ Investigation, reasoning, and concept development — is it about questions, predictions, testing, comparison, explanation, or connecting concepts to observations?
☐ Creativity and problem solving — is it about alternatives, choices, requirements, constraints, testing, and improvement?
☐ Language and communication — is it about describing, listening, questioning, instructing, technical vocabulary, or explaining choices?
☐ Social development and group formation — is it about contributing, coordinating, giving space, helping, shared agreements, or joint problem solving?
☐ Self-regulation and learning to learn — is it about attention, persistence, planning, checking, regulating behavior, or adjusting an approach?

Then choose one main area or a small, coherent combination. Record any secondary goals separately. Return to Chapter 4 and check whether the activity genuinely provides an opportunity to work toward the selected goal.

19 Selection Guide for Observation Points

Select in advance only the observation points that fit the goal and activity. The statements below are broad enough for different K’NEX contexts and specific enough to support focused observation.

Motor and Sensory Development

- Handles K’NEX parts purposefully.
- Connects and removes parts with appropriate force and control.
- Coordinates seeing and doing.
- Distinguishes task-relevant features of parts, such as shape, size, color, or connection type.
- Adjusts grip, force, or movement when the task requires it.

Spatial and Mathematical Thinking

- Recognizes and uses spatial relationships.
- Translates an image, instruction, or mental representation into a construction.
- Compares and uses lengths, distances, quantities, proportions, or shapes.
- Predicts spatial or mathematical consequences of a change.
- Checks and corrects a construction using spatial or mathematical features.

Investigation, Reasoning, and Concept Development

- Explores or formulates a question or problem.
- Makes a prediction or states an expectation.
- Purposefully tries or tests a possibility.
- Compares observations, outcomes, or solutions.
- Uses observations to reason, explain, or choose a next step.

Creativity and Problem Solving

- Explores different approaches or solutions when useful.
- Chooses an approach and tries it.
- Changes the approach when there is a reason to do so.
- Adapts a design or construction to a goal, problem, requirement, or constraint.

- Explains choices and changes.

Language and Communication

- Expresses relevant information, needs, choices, or actions.
- Listens to relevant information or explanations from others.
- Asks for clarification when needed.
- Gives understandable explanations or instructions.
- Adapts communication to the task, situation, or conversation partner.

Social Development and Group Formation

- Contributes to the shared task.
- Responds to the contributions and needs of others.
- Takes space and gives others space.
- Asks for, accepts, or offers help when appropriate.
- Contributes to jointly handling problems, differences, or agreements.

Self-Regulation and Learning to Learn

- Directs attention to the task and refocuses when needed.
- Persists or resumes after difficulty or an unsuccessful attempt.
- Regulates behavior and emotions sufficiently to remain engaged in the task.
- Plans, organizes, and monitors their own actions.
- Checks their own approach and changes it when there is a reason to do so.

When recording observations, also note the amount of support required where useful. Use NO and NOO as explained in Chapter 12. Do not draw a broader conclusion from a single activity than the context allows.

20 Role Bank

The roles below are optional. Choose a role only when it supports the learning goal, the organization, or a relevant learning or observation opportunity. A role may change by phase or be shared by more than one student.

- Builder — carries out agreed construction actions and checks connections.
- Materials manager — manages the agreed supply of materials, identifies shortages, and supports orderly work.
- Designer — keeps track of the design idea, requirements, and changes; this does not mean others cannot contribute ideas.
- Explainer — communicates choices, procedures, or findings on behalf of the group and checks whether the explanation is understandable.
- Investigator — keeps track of the question, prediction, test, and observation.
- Checker — compares interim results with requirements, plan, measurement, or test agreement and reports discrepancies.
- Planner — keeps track of sequence, time, and agreed intermediate steps.

Prevent roles from becoming fixed status positions. When collaboration or broad skill development is central, rotating roles may be useful. When a content task requires continuity, a role may remain the same throughout the activity.

21 Forms and Worksheets

21.1 Preparing an Activity

- ☐ The starting point and relevant prior knowledge are understood.
- ☐ The main goal and any secondary goals have been identified.
- ☐ The K’NEX activity provides an opportunity to work toward the goal.
- ☐ The success criteria are appropriate and concrete enough.
- ☐ Materials, space, time, and organization have been prepared.
- ☐ Instruction and possible support have been determined.
- ☐ The method of evaluation has been selected in advance.
- ☐ A possible next step has already been considered.

21.2 Connecting Goal, Activity, and Success Criteria

Goal: .....

Relevant starting point/prior knowledge: .....

K’NEX activity: .....

Why does this activity fit the goal? .....

Success criteria: .....

How will it be evaluated? .....

21.3 Focused Observation

Activity and goal: .....

Selected observation point(s): .....

Observation and context: .....

Support provided: .....

Outcome / NO / NOO: .....

Possible next step: .....

21.4 Evaluation and Reflection

☐ What does the activity show about the selected goal?

☐ Which explanation, observation, or product information supports that conclusion?

☐ Which support proved necessary or unnecessary?

☐ What can be repeated, broadened, or deepened in a subsequent activity?

21.5 Progress Across Multiple Activities

Use a progress overview only when development across multiple activities is relevant. For each activity, record the goal, context, level of support, a brief observation, and the selected next step. Do not compare scores alone; look especially at changes in independence, quality of reasoning, and application in new situations.

Appendix A — Pedagogical and Instructional Background

This appendix provides the background needed to understand the choices in the main text. It is deliberately concise. The teacher or facilitator is addressed as a professional; general instructional theory is mentioned only where it helps explain the use of K’NEX as a learning tool.

A.1 K’NEX as a Tool for Learning and Development

K’NEX is a construction material that can make ideas, relationships, and mechanisms tangible. It can provide opportunities to act, investigate, design, measure, discuss, and reflect. These possibilities do not automatically produce learning effects. Learning outcomes depend on the chosen goals, the task, instruction and guidance, the participant, and the context.

For that reason, this handbook centers professional choice rather than the material itself. A K’NEX activity is pedagogically and instructionally relevant when the material makes something possible that fits the goal: concrete action, direct feedback from a construction, visible relationships, repeatable testing, or a shared object that students can discuss.

A.2 The Student as the Starting Point

Learning builds on what someone already knows and can do. With K’NEX, experience with the material is an additional factor. A student who is still learning how parts connect has different access to the same content task than an experienced builder. Interest, language, motor abilities, experience with collaboration, and need for structure can also affect which activity is appropriate.

The starting point is therefore functional and goal-oriented: only information that affects the activity or support needs to be considered. This leaves professionals free to use existing student information, observations, and organizational procedures.

A.3 Pedagogical and Instructional Principles

The main principles are alignment among goal, activity, and evaluation; appropriate challenge; meaningful activity; room for active doing and

thinking; focused support; feedback that enables a next step; and attention to safety and participation. These principles are not unique to K’NEX. Their concrete application is shaped by the characteristics of the material and the building situation.

A.4 The Seven Areas of Learning and Development

The seven areas in Chapter 3 organize possible goals without suggesting that development occurs in separate compartments. Motor skills can affect a spatial task; language may be needed to explain an investigation; self-regulation can determine whether a student sustains a design process. The framework mainly helps professionals choose in advance what to focus on and remain cautious afterward about drawing conclusions in other areas.

A.5 Learning Through Building, Acting, Investigating, and Designing

Working with materials can make abstract relationships concrete, but experience becomes educational only when relevant features are noticed, named, compared, or connected to a concept. An activity may therefore include predicting, measuring, drawing, explaining, or reflecting in addition to building itself.

Investigative and design-oriented work have different emphases. Investigation focuses mainly on questions, expectations, observations, and explanations. Design focuses on a solution that must meet goals, requirements, or constraints and can be improved through testing. In practice, the two may follow one another.

A.6 Instruction and Guidance

Support is functional when it provides access to the intended learning without taking over the relevant thinking step. With K’NEX, this can range from modeling a connection to asking a focused question, limiting material choices, providing an intermediate model, or using building instructions. As the student gains mastery, support can be reduced and independence can increase.

A.7 Differentiation and Spiral Learning

K’NEX allows variation in materials, complexity, openness, support, collaboration, and requirements for the outcome. Differentiation is purposeful

when that variation gives a student access to the same core learning or an appropriate next step. Spiral learning builds on this: concepts and skills return in new situations with greater depth, independence, or transfer.

A.8 Evaluation, Assessment, and Further Learning

Evaluation gathers information to determine what the activity produced and what is needed next. With K’NEX, information may come from the model, actions, explanations, test results, a sketch, or conversation. Focused observation and assessment are additional options, not standard requirements. A single activity always provides context-dependent information; broader conclusions require multiple sources and situations.

A.9 Careful and Responsible Use

Use K’NEX in accordance with the instructions for the relevant material and set. Consider age, parts, moving constructions, motors, and the setup of the workspace. This handbook is not a safety manual and does not replace manufacturer information or local procedures.

Responsible use also requires pedagogical restraint. Observations from building activities are not diagnostic. A student may show different behavior in another situation. Use records only for the purpose for which they were collected, and be cautious with labels, rankings, or conclusions that go beyond what the activity supports.

Glossary

- Starting point: the knowledge, skills, experiences, abilities, and support needs of a student or participant that are relevant to an activity.
- Guidance: professional support during an activity, for example through questions, feedback, prompts, material choices, or temporary modeling.
- Spiral learning: revisiting concepts and skills in new situations with increasing depth, independence, or application.
- Differentiation: purposeful variation in access, support, activity, complexity, or processing to respond to differences among students.
- Evaluation: using information about process and outcomes to determine what has been learned and what next step is appropriate.
- Feedback: information about approach, understanding, or outcome that helps someone take a next step.
- Focused observation: looking and listening purposefully to behavior selected in advance because it is relevant to the chosen goal.
- K’NEX Classic: the standard-size K’NEX building system, including rods and connectors.
- K’NEX Micro: a K’NEX building system with smaller parts than Classic K’NEX; activities may require adaptation.
- Kid K’NEX: a building system with larger parts and its own connection methods; follow the instructions for the relevant set.
- Learning goal: a description of what a student should learn, understand, or be able to do through an activity.
- Developmental goal: a desired next step in areas such as thinking, language, motor skills, collaboration, or self-regulation.
- Investigative learning: learning through questions, expectations, focused investigation, comparison, and explanation.
- Design-based learning: learning by developing, working out, testing, and improving a solution based on a goal, requirements, or constraints.
- Systematic work: preparing a goal, choosing steps and resources, monitoring implementation, and adjusting the approach when needed.
- Success criteria: features that show whether a student is moving toward or has reached a goal.

Sources and Content Rationale

This handbook was developed from existing materials by AQ Maarsseveen and K’NEXCHANGE. Relevant pedagogical and instructional background from earlier materials has been incorporated concisely and independently into Appendix A. The main text is organized around the practical route from starting point to goal, activity, guidance, evaluation, and next step.

Primary sources: AQ Maarsseveen and K’NEXCHANGE.

The direct editorial sources are materials developed by AQ Maarsseveen and K’NEXCHANGE. Where those materials refer to other publications or frameworks, those references remain part of the original source context. This handbook does not claim to be a scientifically validated method, diagnostic instrument, or accredited training program.

For broader orientation, widely used international frameworks were also considered, including the OECD Learning Compass 2030 and the European Key Competences for Lifelong Learning reference framework. They provide useful points of reference concerning knowledge and skills, action and reflection, collaboration, problem solving, self-regulation, and broad competence development. These frameworks have not been adopted as a method, curriculum, or assessment system, nor do they imply that K’NEX automatically develops these competences. Concrete application continues to depend on the goal, activity, guidance, student or participant, and context.OECD Learning Compass 2030Key Competences for Lifelong Learning

The development process also took account of current pedagogical and instructional principles and professional practice in education and facilitation. Ideas about functional roles and systematic observation may overlap with previously studied approaches, including LEGO-based Therapy. Their use in this handbook is pedagogical and instructional, serves a broader audience, and makes no therapeutic or diagnostic claims.

About K’NEXCHANGE

K’NEXCHANGE is an independent initiative focused on K’NEX parts, sets, building information, engineering, educational use, and practical tools. K’NEXCHANGE is not an official publication of the K’NEX manufacturer. More information is available at knexchange.org.

Experiences and Suggestions

This handbook is intended for practical use. K’NEXCHANGE therefore welcomes feedback from teachers and facilitators about their experiences with it. Suggestions, practical experiences, and points for attention can help improve a future edition. Feedback is welcome through K’NEXCHANGE.

Working and Learning with K’NEX | K’NEXCHANGE